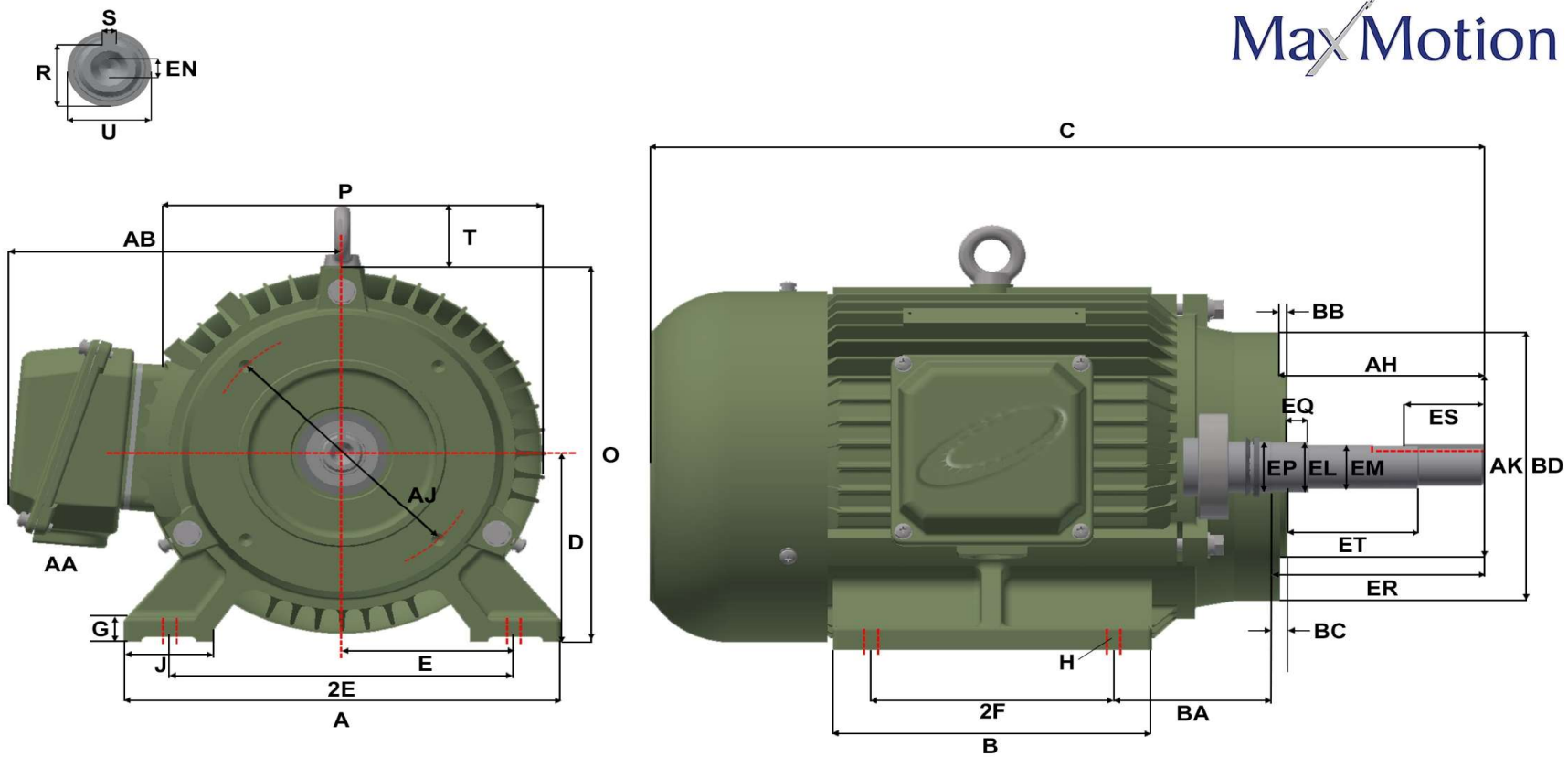

Version: 2WTI	Revised: 26-01-2023	HP	RPM	FRAME	ENCLOSURE	JMPP/JMQP-28
Customer is responsible in determining that MEP product will fit/perform suitably in the intended application		7.5	1200	254JM	TEFC	

A	B	C	D	E	2E	2F	G	H	J	O	P	R
10.00	12.20	24.70	6.25	5.00	10.00	8.25	0.70	0.53	2.75	13.20	12.80	1.112-1.097

S	T	U	AA	AB	AH	AJ	AK	BA	BB	BC	BD	EL	EM
0.252-0.250	2.20	1.2495-1.2490	1.25	10.30	5.25	7.25	8.500-8.497	4.75	0.312-0.250	0.25	10.00	1.750-1.748	1.375-1.3745

EN	EP	EQ	ER	ES	ET
1/2-13	1.77	0.640-0.610	5.281-5.219	3.015-2.985	2.53